Golf-Cart (Full Bridge):

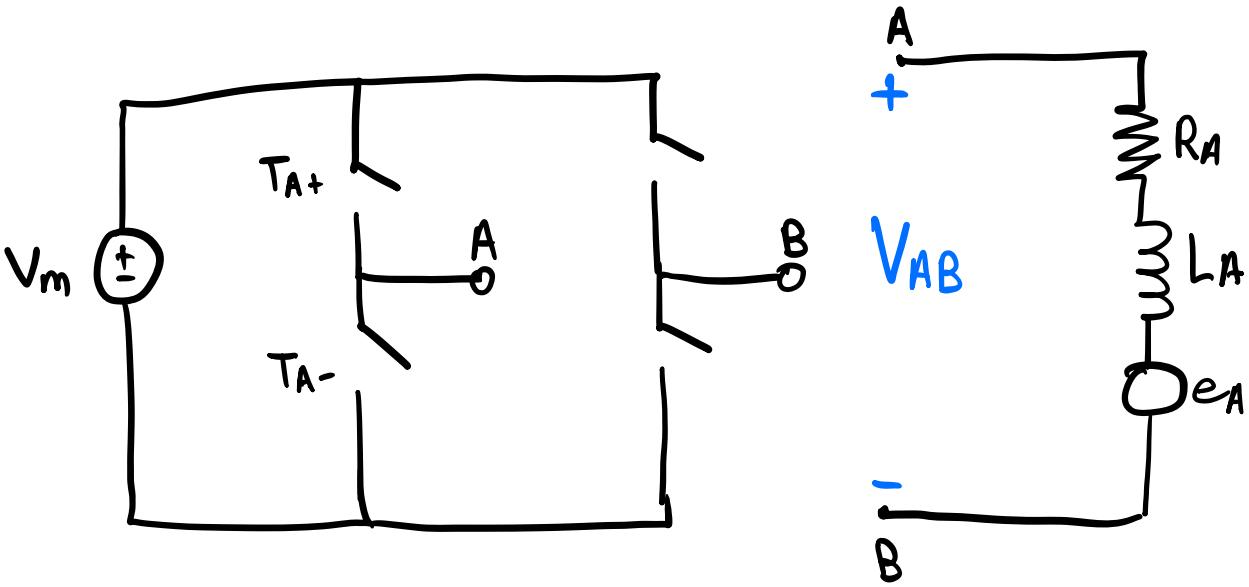

$$V_{AB} = V_m (D_A - D_B)$$

Pair
Pair

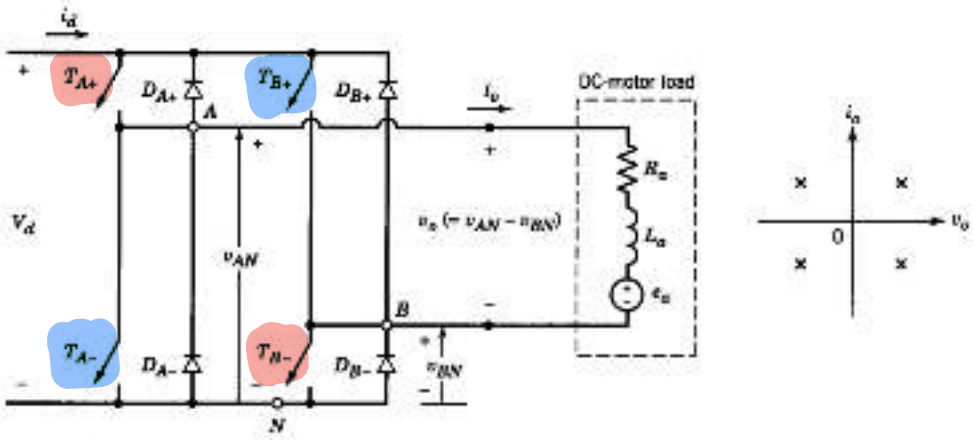

Figure 7-27 Full-bridge dc–dc converter.

Bipolar Mode:

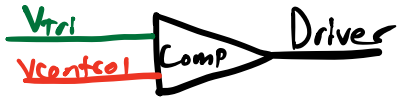

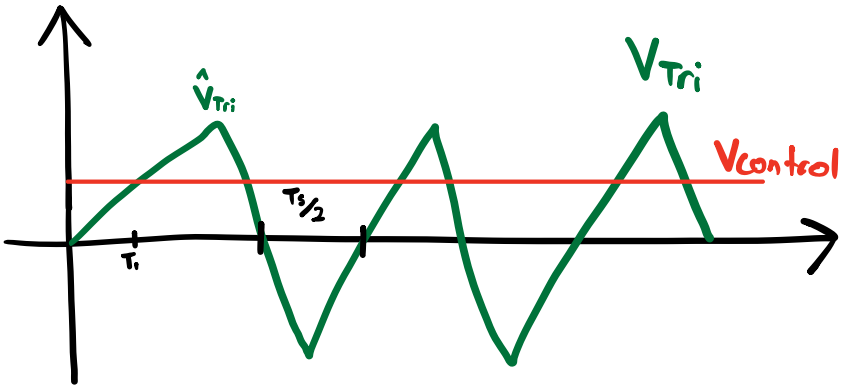

@T_1 → $V_{Tri} = V_{control}$

– occurs at $\frac{V_{control}}{\hat{V}_{Tri}} \cdot \frac{T_s}{4}$

$$D_1 = \frac{t_{on}}{T_s} = \frac{1}{2} \cdot \left(1 + \frac{V_{control}}{\hat{V}_{Tri}}\right)$$

$$D_2 = 1 - D_1$$

$$\boxed{V_o = V_m[2D_1 - 1]}$$

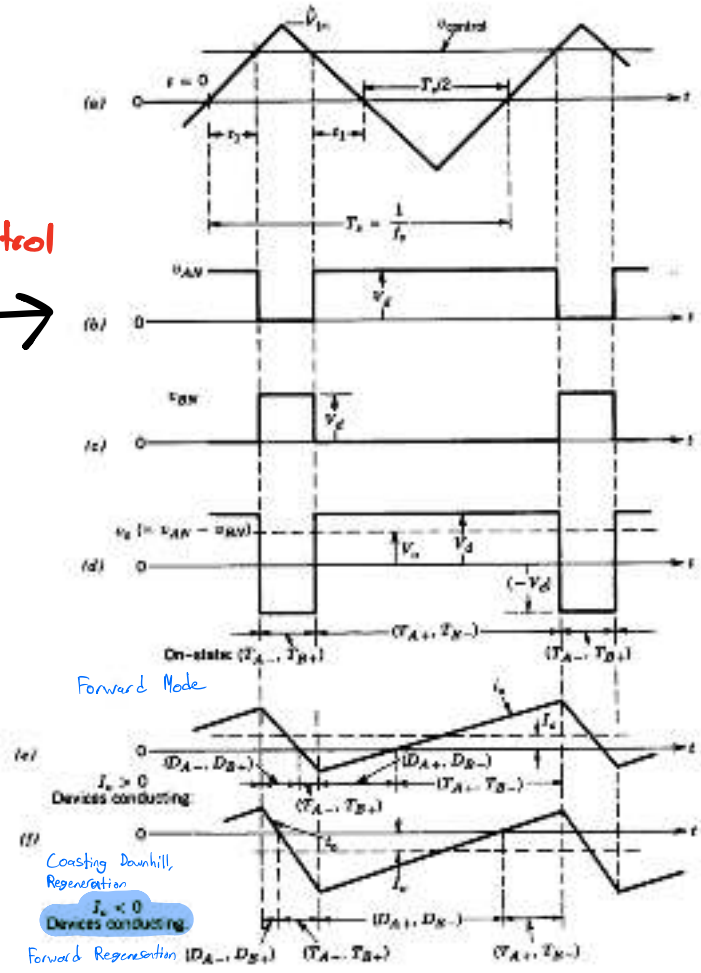

Figure 7-28 PWM with bipolar voltage switching.

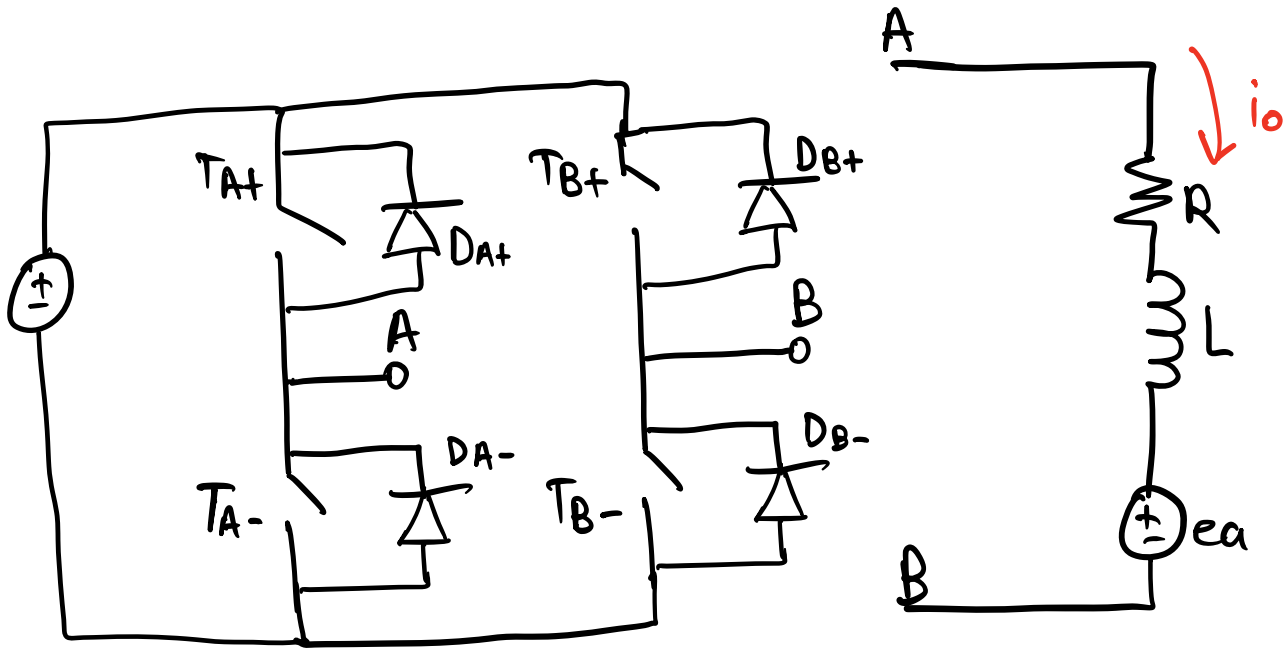

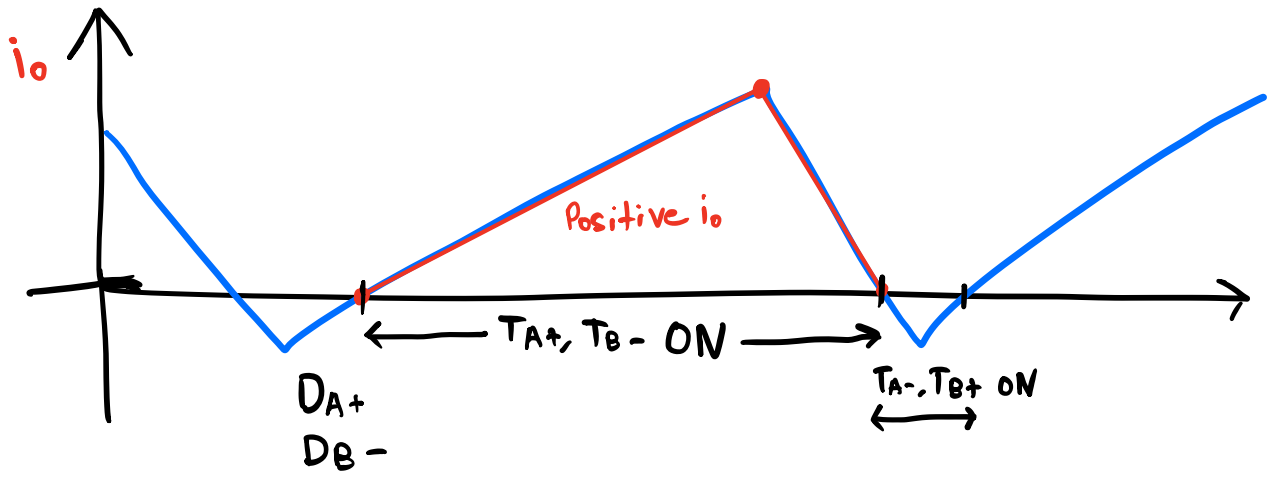

$V_{control} > V_{Tri} \rightarrow T_{A+}$ 'ON'

$V_{control} < V_{Tri} \rightarrow T_{B+}$ 'ON'

T_{A+} and T_{A-} Complementary Mode

T_{B+} and T_{B-} Complementary Mode

Unipolar:

$f_{sw} \times 2$ Double switching frequency

- Smaller Ripple @ Higher Sw frequency